적용 도면 (Applied DRAW. No.)	
도면 번호 (DRAW. No.)	비 고 (Remarks)

MARK	DATE	DETAIL OF REVISION	CHECK	APP.

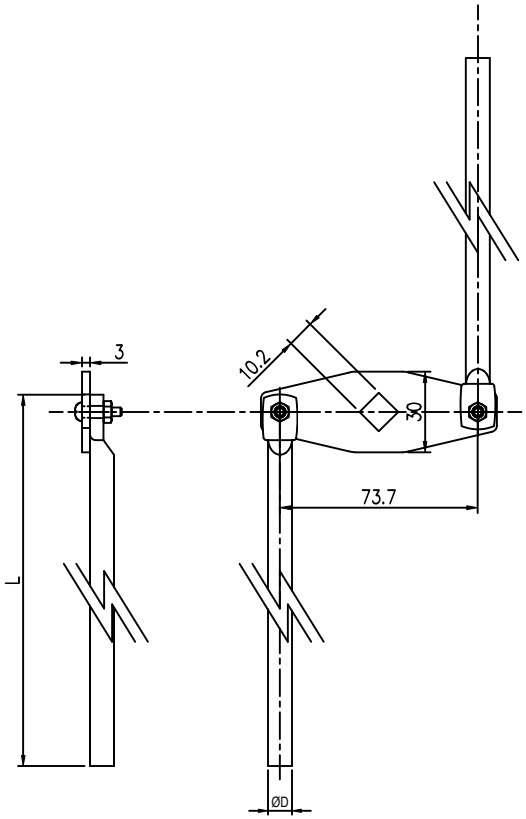

KBH-DAS-10

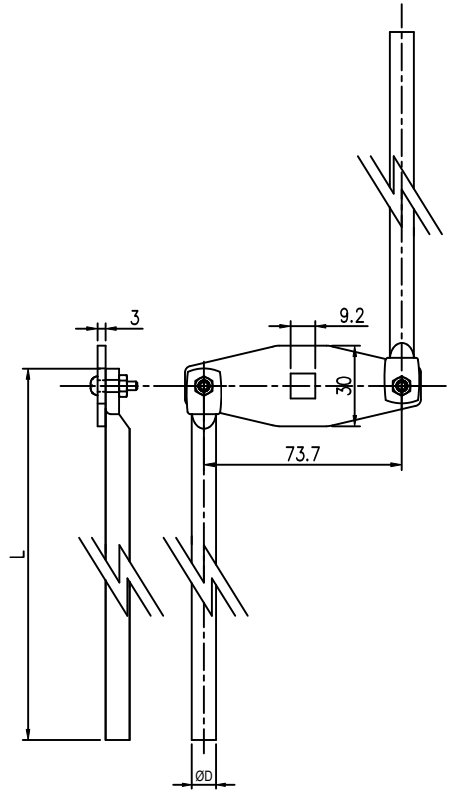

KBH-DAS-9

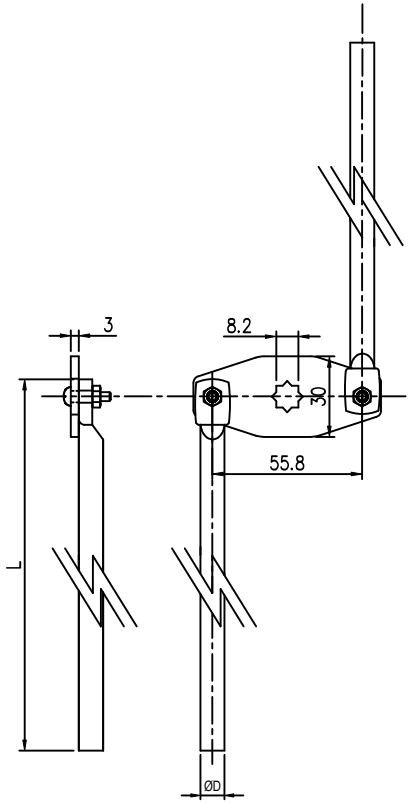

KBH-DAS-8

GENERAL TOLERANCE

DIMENSION \ GRADE	A LEVEL	B LEVEL	C LEVEL
1~4	±0.05	±0.10	±0.25
4~6	±0.07	±0.20	±0.35
16~63	±0.10	±0.30	±0.50
63~250	±0.15	±0.55	±0.90
250~500	±0.30	±0.90	±1.50
500~1000	±0.50	±1.50	±2.50

부품번 Part No.	번호 No.	명 칭 Part Name	갯수 Qt'y	재 질 Material	비 고 Remarks

DRAWN	CHECKED	CHECKED	APPROVED	SCALE : 1/1	MODEL :
				UNIT : MM	TITLE :
광일엔지니어링 KWANGIL ENGINEERING				SIZE : A1	MODEL No.
				DATE :	DWG No.