적용 도면 (Applied DRAW. No.)	
도면 번호 (DRAW. No.)	비 고 (Remarks)
1	
2	

MARK	DATE	DETAIL OF REVISION	CHECK	APP.

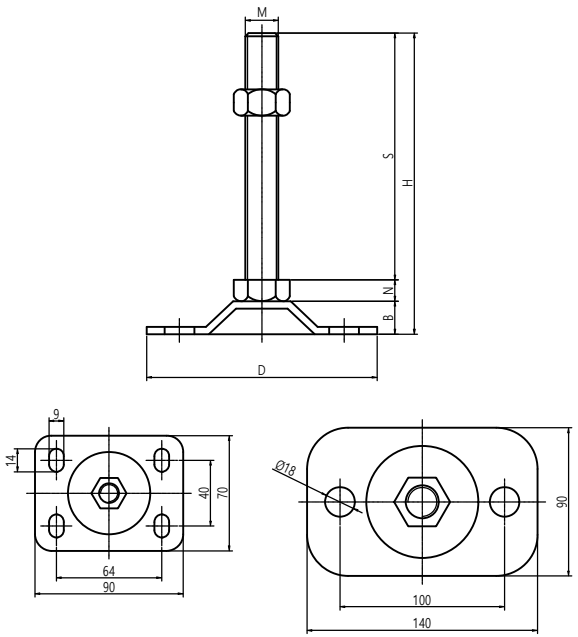

GENERAL TOLERANCE

DIVISION / GRADE	A LEVEL	B LEVEL	C LEVEL
1-4	±0.05	±0.10	±0.25
4-6	±0.07	±0.20	±0.35
16-63	±0.10	±0.30	±0.50
63-250	±0.18	±0.55	±0.90
250-500	±0.30	±0.90	±1.50
500-1000	±0.50	±1.50	±2.50

부 품 번 Part No.	번호 No.	명 칭 Part Name	갯수 Qt'y	재 질	비 고 Remarks

DRAWN	CHECKED	CHECKED	APPROVED

SCALE : 1/1

UNIT:

SIZE: A1

DATE :

MODEL:

TITLE:

MODEL No.

DWG No.

KIANGLENGINEERING