적용 도면 (Applied DRAW. No.)	
도면 번호 (DRAW. No.)	비 고 (Remarks)

MERK	DATE	DETAIL OF REVISION	CHECK	APP.

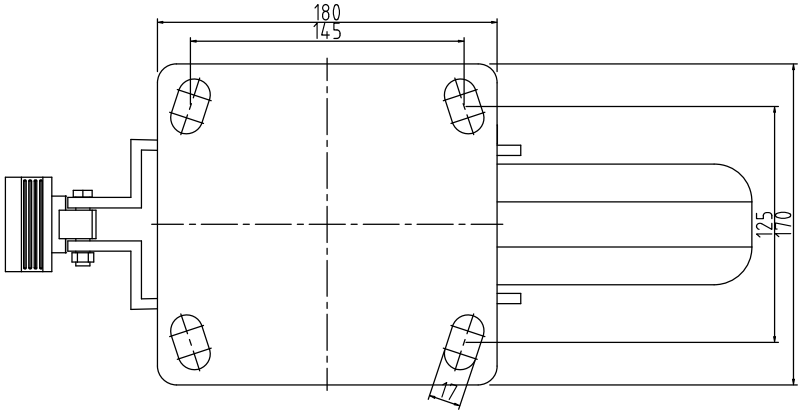

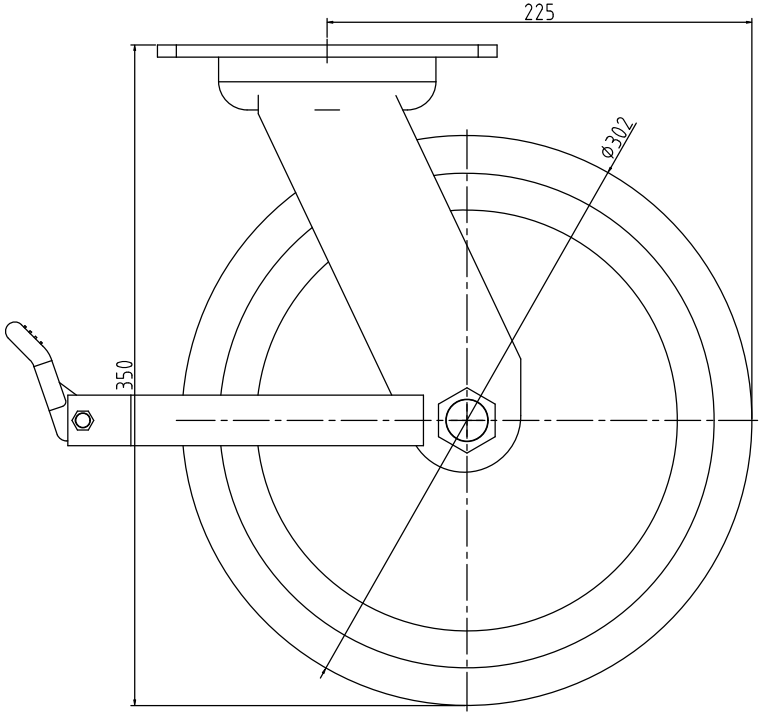

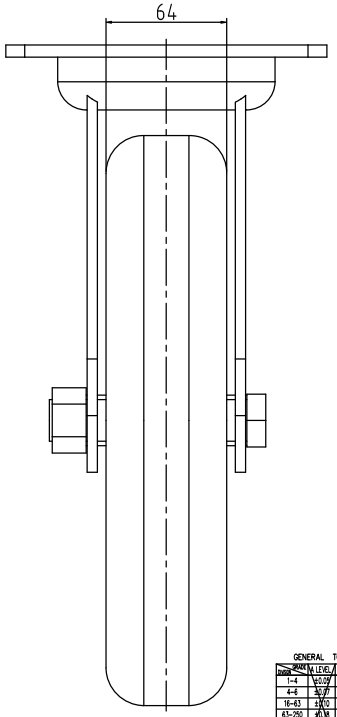

GENERAL TOLERANCE

RANK / DIMENSION	A LEVEL	B LEVEL	C LEVEL
1~4	±0.05	±0.10	±0.20
4~6	±0.05	±0.05	±0.10
6~16	±0.10	±0.20	±0.50
16~63	±0.10	±0.30	±0.50
63~250	±0.15	±0.50	±1.00
250~500	±0.30	±0.80	±1.50
500~1000	±0.50	±1.50	±2.50

부 품 번 Part No.	번호 No.	명 칭 Part Name	갯수 Qt'y	재 질	비 고 Remarks

DRAWN	CHECKED	CHECKED	APPROVED

SCALE	1/1
UNIT	
SIZE	A1
DATE	
MODEL	
TITLE	
MODEL No.	
DWG No.	

KWANGIL ENGINEERING