적용 도면 (Applied DRAW. No.)		
	도면 번호 (DRAW. No.)	비 고 (Remarks)
1		
2		

MARK	DATE	DETAIL OF REVISION	CHECK	APP.
△				
△				

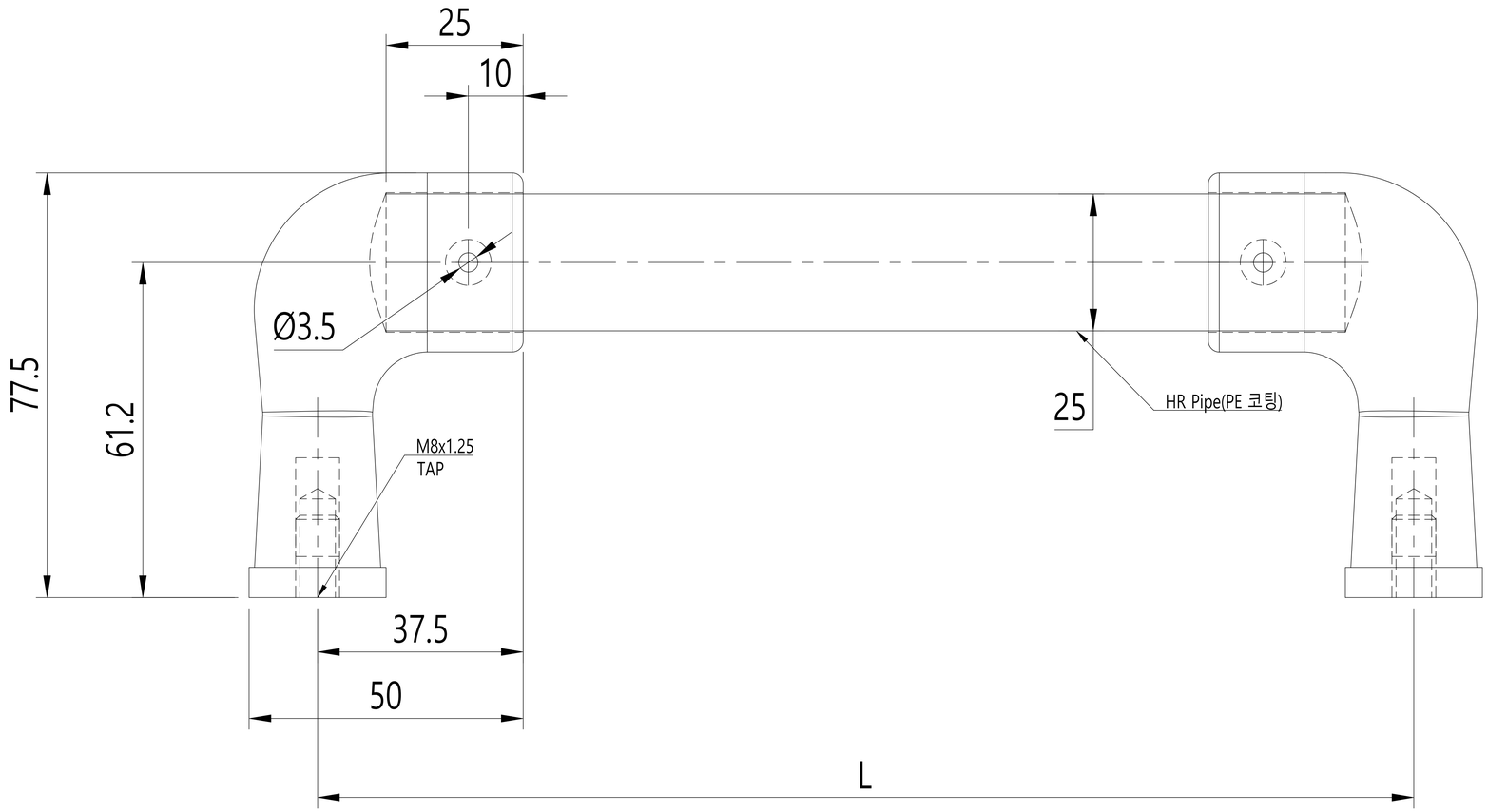

제품명	L	제품명	L
KPKD-250	250	KPKD-400	400
KPKD-300	300	KPKD-500	500
KPKD-350	350	KPKD-600	600

GENERAL TOLERANCE

DIVISION \ GRADE	A LEVEL	B LEVEL	C LEVEL
1-4	±0.05	±0.10	±0.25
4-6	±0.07	±0.20	±0.35
16-63	±0.10	±0.30	±0.50
63-250	±0.18	±0.55	±0.90
250-500	±0.30	±0.90	±1.50
500-1000	±0.50	±1.50	±2.50

부 품 번 Part No.	번호 No.	명 칭 Part Name	갯수 Qt'y	재 질	비 고 Remarks

DRAWN	CHECKED	CHECKED	APPROVED	SCALE : 1/1	MODEL:
				UNIT:	TITLE:
				SIZE: A1 (THIRD ANGLE PROJECTION)	MODEL No.
				DATE :	DWG No.

광일엔지니어링 KWANGIL ENGINEERING