적용 도면 (Applied DRAW. No.)	
도면 번호 (DRAW. No.)	비 고 (Remarks)
1	
2	

MARK	DATE	DETAIL OF REVISION	CHECK	APP.

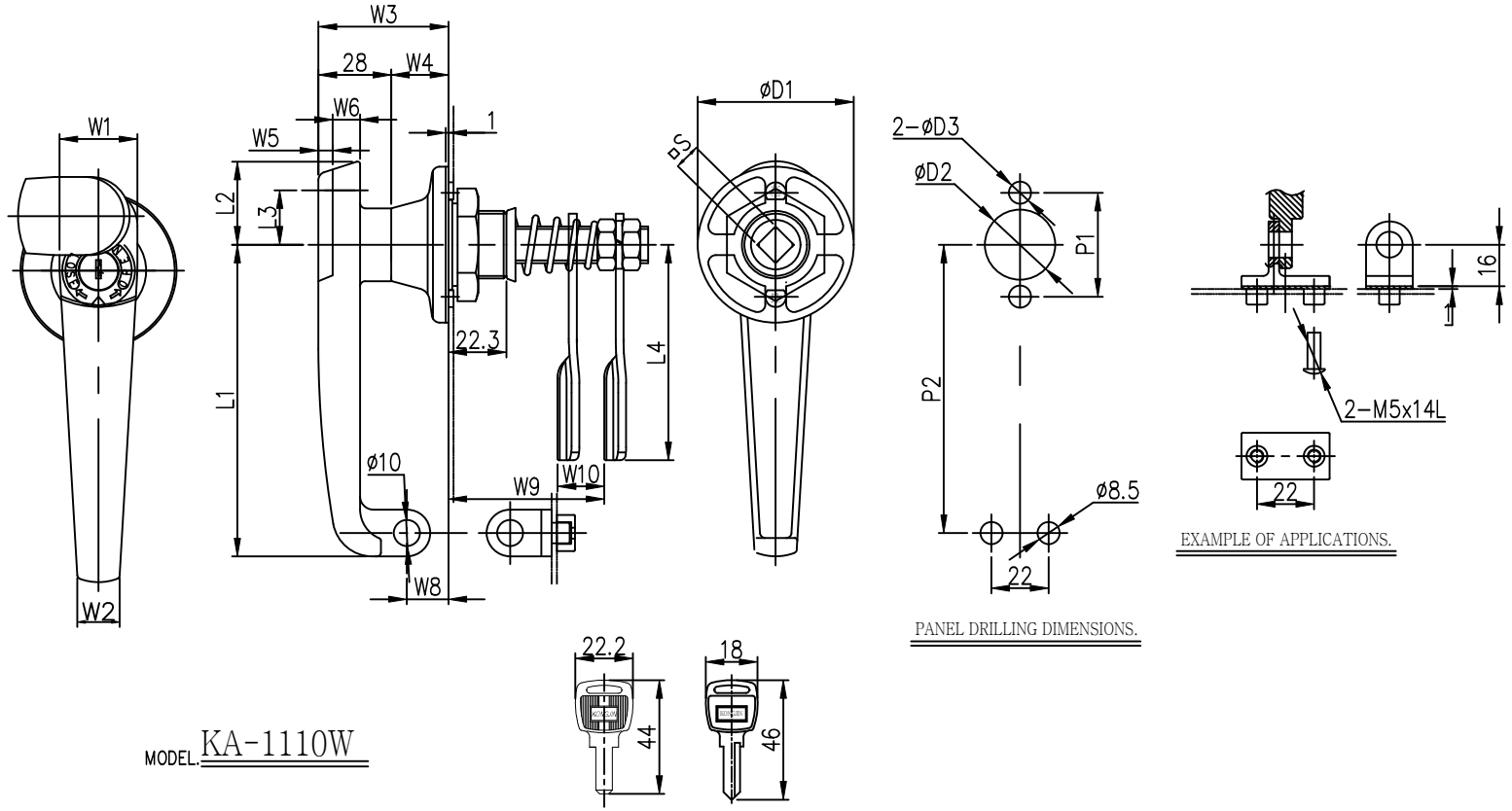

PANEL DRILLING DIMENSIONS.

EXAMPLE OF APPLICATIONS.

MODEL. KA-1110W

	L1	L2	L3	L4	W1	W2	W3	W4	W5	W6	W7	W8	W9	W10	S	P1	P2	D1	D2	D3	Net weight(g)
KBH-KA1110W-1K	120	32	21	83	30	16	50	22	5.5	10.5	22.3	16	62.5	18	10	40	111	60	27	8.5	696
KBH-KA1110W-2K	95	25	16.5	60	26	13.5	43	15	5	10	15	13	46	10	8	32	85.7	48	23	7.5	412

GENERAL TOLERANCE

DIMENSION \ GRADE	A LEVEL	B LEVEL	C LEVEL
1-4	±0.05	±0.10	±0.25
4-6	±0.07	±0.20	±0.35
16-63	±0.10	±0.30	±0.50
63-250	±0.15	±0.55	±0.90
250-500	±0.30	±0.90	±1.50
500-1000	±0.50	±1.50	±2.50

부품번 Part No.	번호 No.	명 칭 Part Name	갯수 Qt'y	재 질	비 고 Remarks

DRAWN | CHECKED | CHECKED | APPROVED | SCALE 1:1 | UNIT: MM | SIZE: A1 | DATE :

MODEL: | TITLE: | MODEL No. | DWG No.

광일엔지니어링 KWANGIL ENGINEERING